Electrolux PROFESSIONAL

Modular Cooking Range Line 900XP 4-Burner Gas Boiling Top with 3mm worktop and electric ignition, 10 kW

ITEM #

MODEL #

NAME #

SIS #

AIA #

391243 (E9GCGHTC0M)	4-Burner (10 kW each) gas Boiling Top with 3mm WorkTop and electronic ignition

Short Form Specification

Item No.

To be installed on open base installations, bridging supports or cantilever systems. High efficiency flower flame burners with continuous power regulation and optimized combustion. Flame failure device as standard on burners to protect against accidental extinguishing. Electronic ignition for burners. Exterior panels of unit in stainless steel with Scotch Brite finish. Pan supports in heavy duty cast iron. Extra strength work top in heavy duty 3 mm stainless steel. Right-angled side edges to allow flush-fitting junction between units.

APPROVAL:

Main Features

- Unit to be mounted on open base cupboards, bridging supports or cantilever systems.
- The four 10 kW high efficiency burners are available in 100 mm diameter with continuous power regulation from 2.2 kW to 10 kW.
- Gas appliance supplied for use with natural or LPG gas, conversion jets supplied as standard.
- Large sized pan support in cast iron (stainless steel as option) with long center fins to allow the use of the largest down to the smallest pans.
- Burners with optimized combustion.
- Flame failure device on each burner protects against gas leakage when accidental extinguishing of the flame occurs.
- The special design of the control knob system guarantees against water infiltration.
- IPX5 water protection.
- Suitable for countertop installation.

Construction

- Unit is 930 mm deep to give a larger working surface area.
- All exterior panels in Stainless Steel with Scotch Brite finishing.
- Model has right-angled side edges to allow flush fitting joints between units, eliminating gaps and possible dirt traps.
- Electric ignition.
- AISI 304 stainless steel worktop, 3mm thick.

Optional Accessories

• Junction sealing kit	PNC 206086	❑
• Draught diverter, 150 mm diameter	PNC 206132	❑
• Matching ring for flue condenser, 150 mm diameter	PNC 206133	❑
• Support for bridge type installation, 800mm	PNC 206137	❑
• Support for bridge type installation, 1000mm	PNC 206138	❑
• Support for bridge type installation, 1200mm	PNC 206139	❑
• Support for bridge type installation, 1400mm	PNC 206140	❑
• Support for bridge type installation, 1600mm	PNC 206141	❑
• Single burner smooth plate for direct cooking - fits frontal burners only	PNC 206171	❑
• Single burner ribbed plate for direct cooking - fits frontal burners only	PNC 206172	❑
• Flue condenser for 1 module, 150 mm diameter	PNC 206246	❑
• Water column with swivel arm (water column extension not included)	PNC 206289	❑
• Water column extension for 900 line	PNC 206290	❑
• Stainless steel double grid for 2 burners	PNC 206298	❑
• Chimney upstand, 800mm	PNC 206304	❑
• Back handrail 800 mm	PNC 206308	❑
• Back handrail 1200 mm	PNC 206309	❑
• Wok pan support for open burners (700/900)	PNC 206363	❑
• Kit town gas nozzles (G150) for 900 gas boiling top	PNC 206384	❑
• Chimney grid net, 400mm (700XP/900)	PNC 206400	❑
• Side handrail-right/left hand (900XP)	PNC 216044	❑
• Frontal handrail, 800mm	PNC 216047	❑
• Frontal handrail, 1200mm	PNC 216049	❑
• Frontal handrail, 1600mm	PNC 216050	❑
• Large handrail - portioning shelf, 800mm	PNC 216186	❑
• 2 side covering panels for top appliances	PNC 216278	❑
• Water filling tap for bain-marie top	PNC 921627	❑
• Pressure regulator for gas units	PNC 927225	❑

The company reserves the right to make modifications to the products without prior notice. All information correct at time of printing.

Modular Cooking Range Line
900XP 4-Burner Gas Boiling Top with 3mm worktop and electric ignition, 10 kW

Front

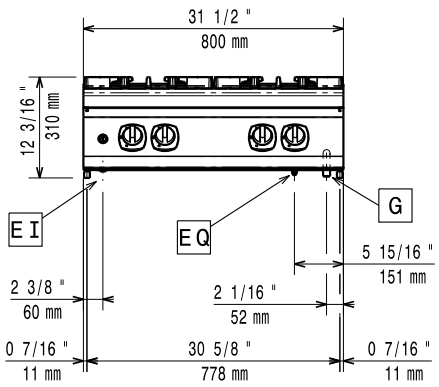

Side

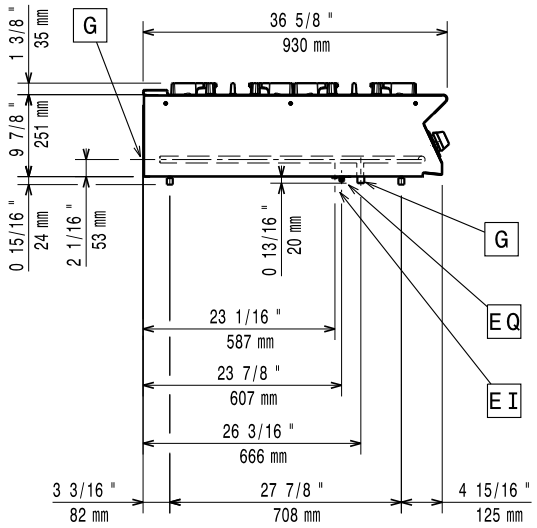

EI = Electrical inlet (power)
G = Gas connection

Top

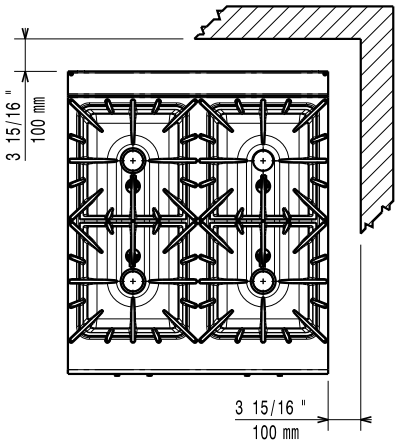

Gas

Gas Power:	
391243 (E9GCGHTC0M)	40 kW
Standard gas delivery:	Natural Gas G20 (20mbar)
Gas Type Option:	LPG;Natural Gas
Gas Inlet:	1/2"

Key Information:

Front Burners Power:	ISO 9001; ISO 14001 - ISO 9001; ISO 14001 kW
Back Burners Power:	10 - 10 kW
Back Burners Dimension - mm	Ø 100 Ø 100
Front Burners Dimension - mm	Ø 100 Ø 100
External dimensions, Width:	800 mm
External dimensions, Depth:	930 mm
External dimensions, Height:	250 mm
Net weight:	79 kg
Shipping weight:	78 kg
Shipping height:	540 mm
Shipping width:	1020 mm
Shipping depth:	900 mm
Shipping volume:	0.5 m³
Certification group:	N9CG

If appliance is set up or next to or against temperature sensitive furniture or similar, a safety gap of approximately 150 mm should be maintained or some form of heat insulation fitted.

The company reserves the right to make modifications to the products without prior notice. All information correct at time of printing.